TEAR SHEET

Go Lightly 54" Two Light Linear Chandelier
Item # BBL 5085SB-SB

Designer: Barbara Barry

O/A Height: 60.25"
Fixture Height: 15.5"
Width: 54"
Canopy: 4.75" Round
Finishes: BZ, CW, G, PN, SB
Shade Treatments: BZ, CW, G, L, PN, SB
Shade Details: 5.5" x 6" x 7"
Socket: 2 - E12 Candelabra
Wattage: 2 - 6.5 LED B11
Weight: 5 Pounds
Note: UL Only | Custom Height Available

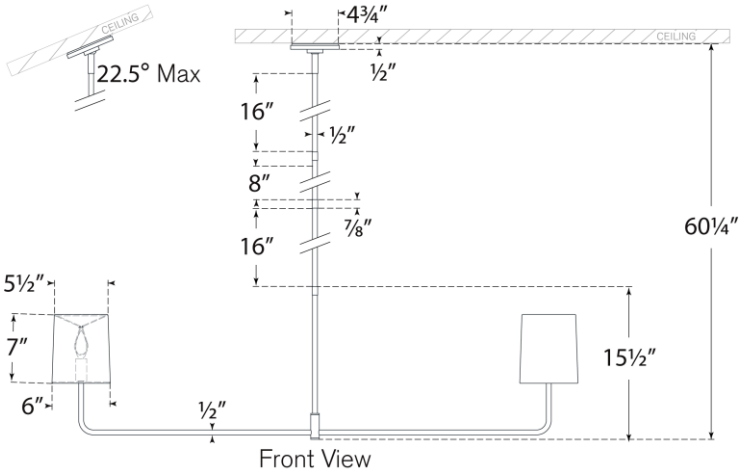

Front View

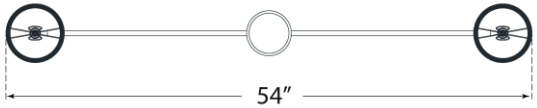

Top View

VISUAL COMFORT & CO.